BRØDR. FREBERG AS

Technical data sheet

- ***MATERIALS:***
  Body in Ductile iron EN GJS-450-10
  Stem in stainless steel AISI 420
  Disc and spring in stainless steel AISI 304 (DIN 1.4301)
  Seat gasket in rubber EPDM
  Washer in PTFE
  Body epoxy coated

- ***TECHNICAL LIMITS:***
  Working pressure: 16 bar
  Working temperature: -10ºC to 80ºC
  Minimum working pressure 0,02 bar - 0,04 bar

- ***FEATURES:***
  Flanges drills size according to EN-1092 PN10 and PN16
  ANSI B10.1 Class 125/150
  Coating: Fusion bonded Epoxi ANSI/AWWA C550

- ***INSTALLATION:***
  Guaranteed for the use of cold and hot water, waste water, alimentary industry, steam, alkaline liquid and weak acids.

Nº	NAME	MATERIAL	QUALITY
1	Body	Ductile iron	EN-GJS-400 (GGG40)
2	Seat	Rubber	EPDM
3	Disc	Stainless Steel	AISI 304
4	Spring	Stainless Steel	AISI 304
5	Washer	Rubber	PTFE
6	Stem	Stainless Steel	AISI 420

BRØDR. FREBERG AS

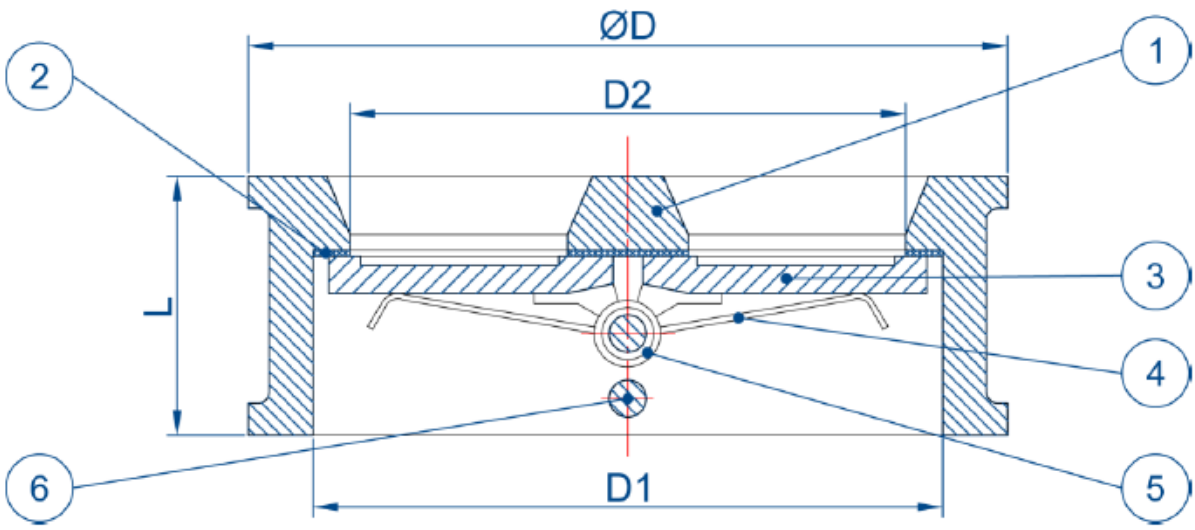

MEDIDA *SIZE*	DN	L	ØD	D1	D2
2"	50	54	102	64	46
2 1/2"	65	54	121	78	60
3"	80	57	134	94	70
4"	100	64	162	117	84
5"	125	70	192	145	115
6"	150	76	218	170	134
8"	200	95	273	224	184
10"	250	108	328	265	220
12"	300	143	378	310	260
14"	350	184	438	360	302

All dimensions in milimeters

Head loss

The **head loss** is the **pressure drop** produced in a fluid as a result of frictions and the path change of the particles by itself and against pipe walls, valves and other accessories.

To evaluate this losses the **flow factor (Kv)** is defined, that is a design factor that connect the height increment (Δh) or the pressure increment (ΔP) between the inlet and the outlet of the valve with the flow rate (Q). This coefficient is defined as the flow rate in cubic meters per hour [m^3/h] of water at 16ºC with a pressure drop inside the valve of 1 bar.

It's important to know the flow coefficient to measure adequately the valve is needed to accomplish the determined requests.

BRØDR. FREBERG AS

Flow factor (Kv)

This Kv values were calculated using the following units: flow rate in m^3/h and a pressure drop of 1 bar.

SIZE	DN	Kv
2"	50	28
2 1/2"	65	60
3"	80	110
4"	100	170
5"	125	820
6"	150	1150
8"	200	1920
10"	250	2300
12"	300	3530
14"	350	5100

Head loss chart

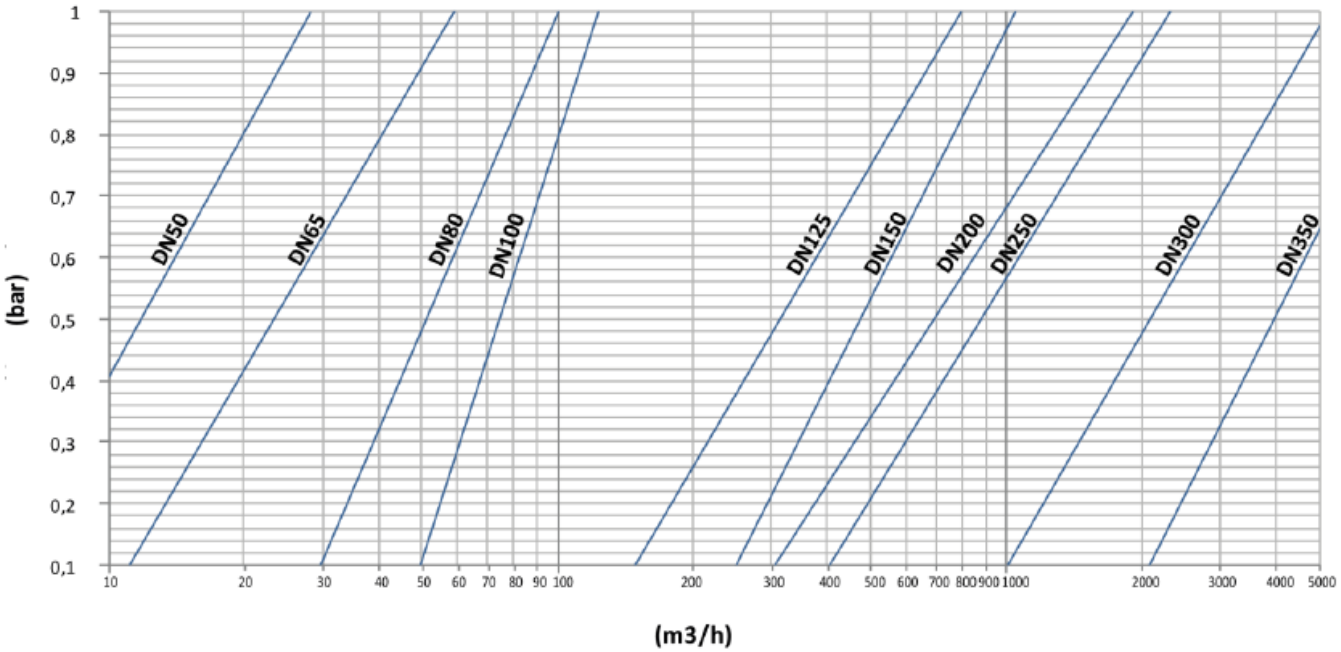

Pressure-temperature chart